Discrete Boost

[Revision 1.1 - 5 / 30 / 01]

A DISCRETE OP AMP GAIN MACHINE

CIRCUIT DESCRIPTION: Input couples to Q1, configured as a source follower, through input coupling cap C1. R1 prevents clicks when using true bypass. R2 provides voltage bias to Q1, as well as the rest of the circuit, from the BIAS trim-pot, set up as a voltage divider between the positive supply and ground. Q1 is directly coupled to the gate of Q2. Q2, Q3 and Q4 comprise a minimal operational amplifier set up in a non-inverting amplifier configuration. Q2 and Q3 form a differential amplifier, the output of which is coupled from the drain of Q2 to the base of Q4, set up as a high gain, voltage amplifier. The gate of Q2 is the positive input and Q3's gate is the negative input for the op amp. The output of the operational amplifier is taken from the collector of Q4. C2 and C5 both serve to compensate the op amp to reduce oscillations in the upper frequencies. C2, C4, R7 and the "GAIN" pot make up the components in the feedback path and function the same as in an IC op amp configuration. The output of the operational amplifier is taken from Q4's collector and is coupled to the "LEVEL" pot through C3.

DESIGN NOTES: This design uses discrete components, instead of the conventional IC op amp, to achieve a clean to lightly overdriven boost. The characteristics of the overdriven sound will depend greatly upon the output transistor, Q4; if available, try a high hFE germanium transistor as Q4. Trim the "Bias" pot until the collector of Q4 is at ½ V+, for greatest headroom, or away from ½ V+ for asymmetrical clipping when overdriven. With JFETs comprising the differential amplifier, and using a Ge transistor with a gain of 200 as Q4, there was very light distortion, even at full gain. R6 and R4 may need to be adjusted to suit different transistors. C5 while serving to compensate the op amp, also sets the slew rate; raising it's value will cut highs, raising it's value significantly will induce slew rate limiting, drastically cutting highs and inducing a unique distortion.

ETC.: While having lower gain, higher CMRR and input offset voltage than conventional IC op amps, this circuits offers lower noise and ease of modification as well as the ability to use different types of transistors for different sound qualities. Use this as a clean boost to cut through the mix, to overdrive your amp, or push the gain up and utilize this circuit's smooth distortion. More importantly, try implementing this design in place of IC op amps and see if you can achieve some new and unique sounds!

Part Number	Value	Notes
Resistors		
R1	1 Meg	Pull down resistor
R2	1 Meg	Bias resistor
R3	10k	Source follower bias resistor
R4	22k	Sets current through differential pair
R5	1k	Gain/bias resistor for + input (optional)
R6	3k3	Bias resistor for output gain stage
R7	1k	With C4, sets lo-freq roll off
Capacitors		
C1	.1 uF	Input coupling cap
C2	100 pF	Compensation cap
C3	.1 uF	Output coupling cap
C4	.1 uF	With R7, sets low-freq roll off
C5	47 pF	Compensation cap
C6	10 uF	Power supply bypass cap
C7	10 uF	Bias supply bypass cap
Pots		
Bias	50k (trim)	Sets voltage bias for circuit through R2
Gain	1 Meg	Sets gain of discrete op amp
Level	100k (log)	Sets output level of circuit
Semiconductors		
Q1	J201	Input buffer, source follower
Q2	J201	Gate is positive input of op amp
Q3	J201	Gate is negative input of op amp
Q4	Any PNP	Collector is output of op amp
D1	Any Si diode	Reverse polarity protection

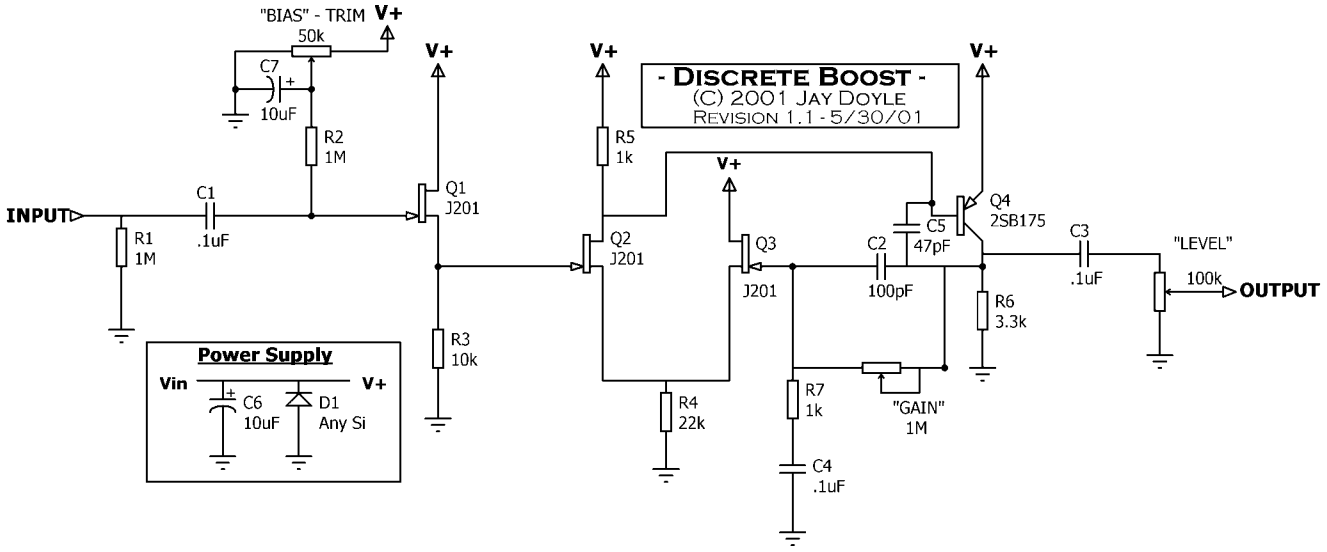

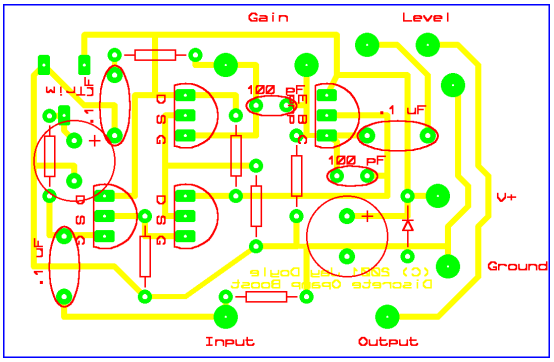

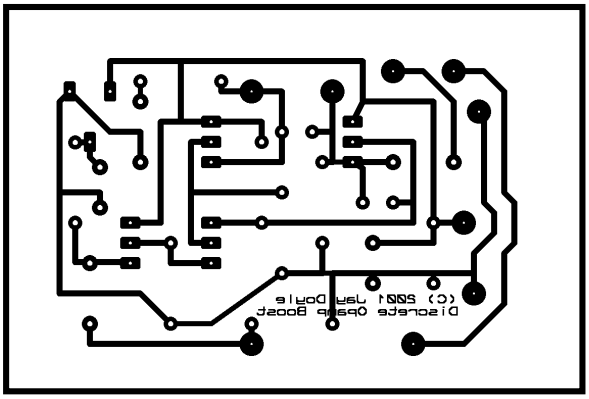

Layout Shown Inside 2" x 3" Reference Box